XGE Silicon Stack Ethernet

XGE4022-PMC-CC Data Sheet: Dual Port 1 Gbit/sec Silicon Stack Ethernet PMC (front copper)

XGE4022 PMC

The XGE4022 is the only true hardware based TCP/IP Offload Engine (TOE) available in a PMC form factor. The XGE product family differentiates itself from "non-TOE" standard Gigabit Ethernet (as well as simple processor based TOE architectures) by delivering high sustained throughput, maximum host offload, ultra-low latency, and rock solid deterministic behavior.

The combination of the XGE hardware based TOE performance characteristics and it's programmable architecture enables the use of Gigabit Ethernet as a high performance network fabric - one that offers the ubiquity, compatibility and simplicity of standard Ethernet and the performance characteristics needed for high performance embedded systems.

XGE Silicon Stack Advantage

Standard Gigabit Ethernet interfaces stifle the performance of even the most powerful CPUs when trying to move data at high rates, let alone at full wire speed rates (1Gbps). This is due to the significant overhead caused by the TCP/IP protocol stack.

The XGE series processes the complete protocol stack including Ethernet, TCP, UDP, IP, iSCSI, & RDMA in dedicated silicon and frees all I/O protocol processing from the host system. By leveraging the XGE product line, you can realize wire speed transfer rates, minimal host processor overhead, microsecond latency and high determinism. Processor based TOE interfaces merely offload the host and are still plagued with high latency, poor reliability, and unpredictable behavior.

XGE Silicon Stack Dual 1GbE vs. Software Stack Dual 1GbE

	XGE Silicon Stack Dual Channel, 1GbE	**Software Stack** Dual Channel, 1GbE
Throughput max sustained rate	**500 Mbyte/s** "wire rate"	**20 Mbyte/s** host CPU limited
Host Overhead	**1%**	**100%**
Latency	**15 usec**	**250 usec**
Determinism typical variation	**Rock Solid ± 2 usec**	**Poor ± 200 usec**
Reliability under load	**Excellent** under any load conditions	**Poor** under heavy load



XGE4022-PMC-CC Features:

- **Silicon Stack Offload – full hardware offload**
- **Full line rate throughput**
- **Very low host processor overhead**
- **Ultra low latency & rock solid determinism**
- **Zero Copy / Direct Data Placement (into app memory)**
- **Large send/receive offload**
- **UDP streaming support**
- **100% standard Ethernet compatibility**
- **Hardware BIT (Built in Test)**
- **Low power consumption**
- **Dual port - copper RJ45 connectors**
- **Front panel optical version also available**
- **Rugged conduction cooled versions available**
- **Comprehensive Software Library & driver support**
- **TOE Networking & iSCSI Storage Support**

Extensive Software Support & Capability

Critical I/O supplies all the hardware, drivers, libraries, and protocol support you'll need for rapid system development without wasting your time debugging drivers. All software has been highly optimized to deliver maximum performance, reliability, and capability.

The XGE4022 hardware is accompanied by an extensive offering of software libraries and device drivers with support for embedded / real-time operating systems (VxWorks, RT Linux, and others) as well as mainstream OS platforms.

In addition to standard OS level drivers, Critical I/O offers a comprehensive library that is ideally suited to applications that want to completely bypass the OS or that have no OS such as signal processing systems. These libraries are capable of running on a variety of embedded processor families, such as PowerPC, Intel/AMD x86, and DSPs.

Silicon Stack vs. Software Stack TOE

Full Hardware TOE, such as Critical I/O's XGE Silicon Stack Gigabit Ethernet hardware (Figure 1, right), is designed specifically for real-time applications. The XGE hardware implements full TCP/IP offload in silicon. Full offload provides ultra high performance, very low CPU loading, and perhaps most important for real time systems, highly deterministic operation and consistently high data rates. And as can be seen in the figure, there is no extra copying of data between host and PMC, and no time-consuming interactions between the TOE hardware and a software stack. Thus the latency, performance, and determinism characteristics that are critical in real-time systems can be achieved.

Figure 1 compares the two PMC approaches from a software point of view. This illustrates that, even though Processor based "TOE" (figure 2, center) can be used to offload TCP/IP cycles from a host processor, it solves only one of the problems of traditional Ethernet due to its continued reliance on the software TCP/IP stack.

The XGE Silicon Stack TOE approach (figure 1, right) eliminates the TCP/IP software stack, essentially connecting the TOE offload hardware directly into the sockets interface.

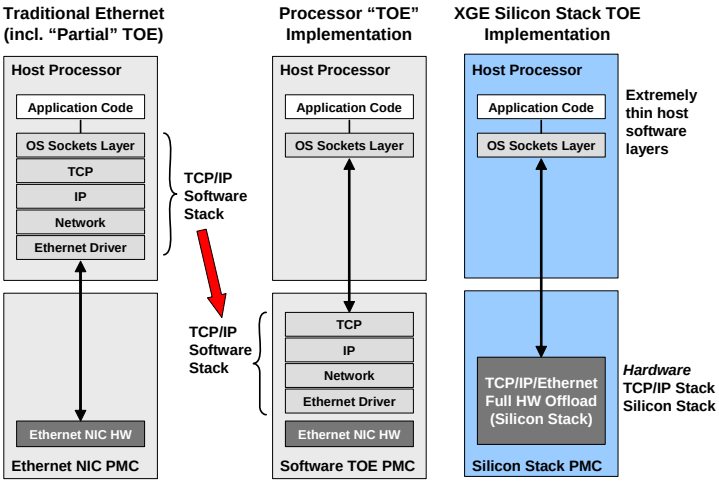

Figure 1: *TOE implementation alternatives.*

Compatibility and Flexibility

The XGE flexible sockets interface model maintains full compatibility with all applications, including both custom user applications as well as all "pre-built" network applications such as NFS, FTP, Telnet, etc. This means that the use of Silicon Stack TOE is largely transparent to users.

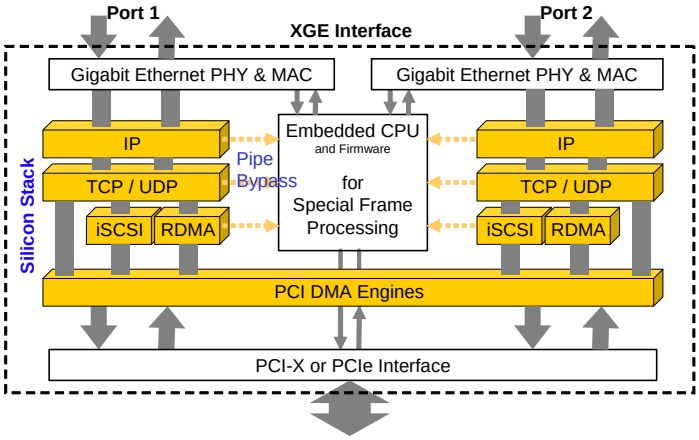

Figure 2: *XGE Silicon Stack dual-path architecture.*

In addition, the XGE Silicon Stack TOE hardware has a unique Dual Path architecture, shown in figure 2. The Dual Path architecture features two dedicated pipelined hardware data paths that implement full TCP/UDP/IP/RDMA/iSCSI offload in silicon. In addition, a powerful firmware programmable engine is available for *optional* protocol customizations and protocol extensions. This engine has the ability to "tap in" to the hardware data paths to accommodate special frame processing related to enhanced or specialized protocols.

Summary

There are many advantages in using Gigabit Ethernet in data intensive real-time systems. The use of 1 and/or 10 Gigabit Ethernet allows interoperability with a wide variety of standard, low cost Ethernet hardware and protocols, while the incorporation of XGE Silicon Stack technology allows ultra-high performance operation where needed.

Processor based Ethernet "TOE" PMC implementations are not up to the task of providing high performance operation. They suffer from unpredictable data rates, high latencies, poor determinism, and poor reliability due to the continued reliance on a complex software TCP/IP stack and its time-consuming interactions with traditional Ethernet NIC hardware.

Critical I/O's Silicon Stack XGE hardware implements full TCP/UDP/IP/RDMA/iSCSI offload in hardware, and thus eliminates all of the disadvantages associated with software based approaches. XGE hardware and software provide transparent operation, consistently high data rates, very low CPU loading, very low message latencies, and highly deterministic performance.

XGE4022 PMC (dual front panel copper) Technical Specifications

Controller Architecture	Full hardware state-based TOE protocol processor
Ethernet Rates	1000/100/10 mbps/port
Data Transfer Rate	250 MBytes/sec (per port, full-duplex) 500 MBytes/sec sustained data rate (aggregate for interface)
Topology	Switched Gigabit Ethernet & point to point
Protocol Support	TCP, UDP, IP, iSCSI (hardware capable of RDMA support)
RAM	64 MByte SDRAM reassembly buffer
Host Bus Interface	33/66 MHz PCI 2.3; 66/100/133 MHz PCI-X 1.0; 32/64 bit, master & slave, 3.3V and 5V signaling
Ports	Two copper front panel ports
Connectors	Two copper RJ45 connectors
Form Factor	PMC, 64 bit PMC Specification; IEEE P1386-2001, IEEEP1386.1-2001
Power Requirements	+5VDC at 2.1A (max) **standard configuration** (special factory configuration : +3.3VDC at 3.1A)
Power Consumption	9.5 Watts (typical)
Temperature	Operating: 0C to +55C; Storage: -40C to +85C
Humidity	Operating: 10-90%, non-condensing; Storage: 5-95%, non-condensing
Supported Host Processors	Intel, PowerPC, DSP, etc.
Software Support	OS Drivers: VxWorks, Linux, Integrity; XGE Software Library (OS independent & Windows RTX)
Model Number	XGE4022-PMC-CC
Model Description	Dual ported Gigabit Ethernet TOE PMC, copper RJ45 connectors, commercial temp air-cooled hardware

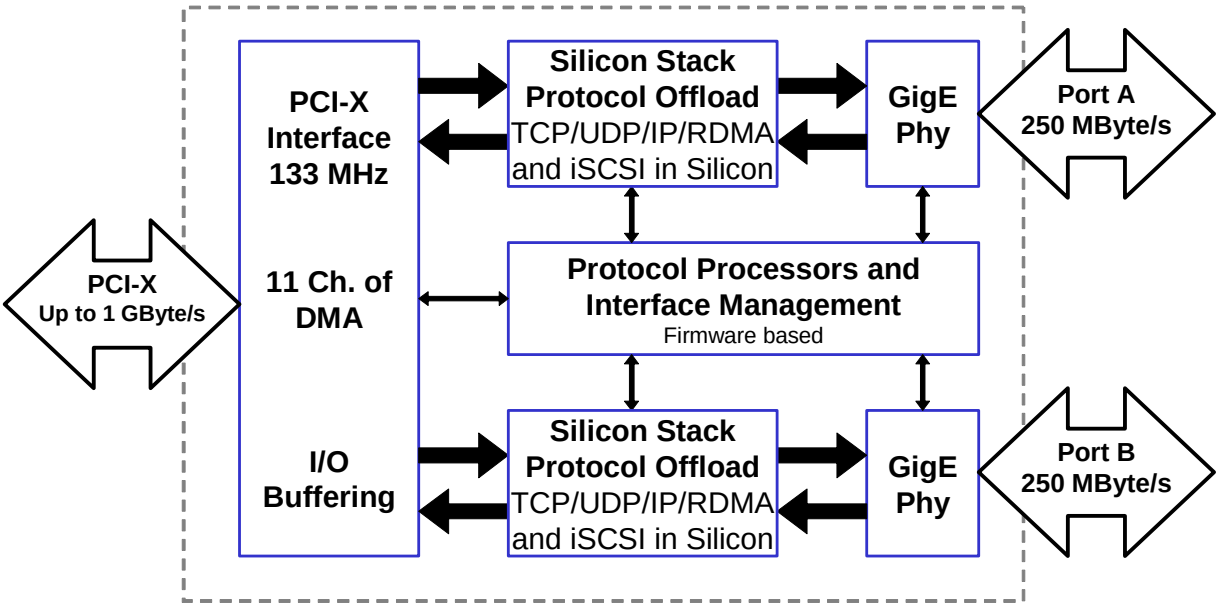

Block Diagram: *Functional block diagram for XGE4022 PMC by Critical I/O. This PMC provides two independent Gigabit Ethernet ports, each with Silicon Stack offload of TCP, UDP, IP, iSCSI, and RDMA protocols. Dedicated hardware provides full duplex operation at wire-speed sustaining up to 250 MBytes/sec on each port, and 500 MBytes/sec with both ports operating simultaneously.*

© 2008 Critical I/O, LLC. All rights reserved. Critical I/O, LLC believes the information in this document is correct, however, the information is subject to change without notice. Critical I/O, LLC assumes no responsibility for any errors or omisions in this document.