GL Series: Single & Multi Output Switchers



200 Watt model

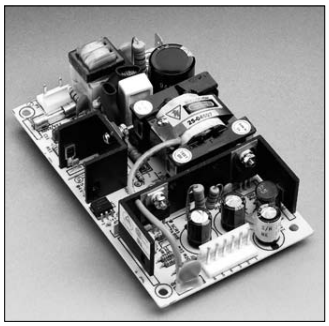

40, 65, 100 Watt models

UL 6950
E137632
EN 60950

These compact, low profile, AC/DC switching power supplies offer universal input voltage with no switches or jumpers, ideal for higher volume worldwide applications. 40 watt through 110 watt are printed circuit board design with pin and socket connections, 200 watt models are enclosed with internal DC brushless fan and screw terminal connections.

Features

- Universal input
- Compact size
- Industry standard size (3 x 5", 40 Watt)
- On board input fuse
- Automatic overload protection
- OVP on Output #1
- UL Recognized, CSA Certified, CE, LVD, TUV
- 100% Burn-In
- Power fail signal on 110 and 200 Watt model
- 200 Watt enclosed with screw terminals
- One year warranty

Applications

- Industrial computers
- Control
- Instrumentation
- Scanners
- Drive circuits
- CNC machinery
- Printers
- Peripherals

Mating Connector Kits

- Can be ordered separately for units with Molex connection (40, 65 and 110 watt units only).
- Kits include mating housing and pins for input and output connection.

Specifications

Parameter	Condition	Limit
Input		
Input Voltage		85 to 264 Vac
Input Frequency		47 to 63 Hz
Protection		Line Fuse on board
Inrush Current	Cold Start	15 to 60 A Max
Output		
Line Regulation	Full Rated Load	±0.5%
Load Regulation	Full Rated Load	±1% Single Output ±2% Main Output
Cross Regulation	Full Rated Load	5% Typical
Minimum Loading	Main Output	10%
Temp. Coefficient		±0.04%/ °C
Hold up Time		10 mS min.
Overvoltage Protection	#1 Output	112 to 132% of Nominal
Output Ripple		2% peak to peak max.
General		
Operating Temperature	Full Rated Load	-0 to 50°C
Storage Temperature		-20 to +85°C
Efficiency	Full Rated Load	65% min.
MTBF	Per MIL-HDBK-217E	100,000 hour
Shock & Vibration		Designed to meet MIL-STD 810C
Safety	All Models	UL 60950, CSA C22.2 No. 234, EN 60950
Cooling		30% Rated Current

Connector Kits

Catalog Number	Applicable Models	Input/Output Mating Connector	Signal Connector
GL40–KIT	40 Watt	X	N/A
GL65–KIT	65 Watt	X	N/A
GL110–KIT	110 Watt	X	N/A
GL200–KIT	200 Watt	N/A	X

Auxiliary Signal Connector - 200 watt units only

Model	Pin 1	Pin 2	Pin 3	Pin 4
All 200 Watt Models	Fan	Common	Common	Power Fail

Auxiliary Mating Connector Kit for 200 watt units

Kit is for auxiliary signal connection only. Not required for input and output connection which are screw terminal.

Selection Table for 40 Watt, GL Series

Catalog Number	Output 1	Output 2	Output 3	Maximum Output
GLS–01–040	5 V, 6A	-	-	30 W
GLS–02–040	12 V, 3.5 A	-	-	40 W
GLS–03–040	15 V, 3A	-	-	40 W
GLS–04–040	24 V, 2 A	-	-	40 W
GLD–01–040	5 V, 3 A	12 V, 2 A	-	40 W
GLD–02–040	5 V, 3 A	15 V, 2 A	-	40 W
GLD–03–040	5 V, 3 A	24 V, 1 A	-	40 W
GLT–01–040	5 V, 3 A	12 V, 2 A	-5 V, 0.3 A	40 W
GLT–02–040	5 V, 3 A	12 V, 2 A	-12 V, 0.3 A	40 W
GLT–03–040	5 V, 3 A	15 V, 2 A	-15 V, 0.3 A	40 W
GLT–04–040	5 V, 3 A	15 V, 2 A	-12 V, 0.3 A	40 W
GLT–05–040	5 V, 3 A	24 V, 1 A	-12 V, 0.3 A	40 W

Output Connector

Model	Pin 1	Pint 2	Pin 3	Pin 4	Pin 5	Pin 6
GLS	Output 1	Output 1	Output 1	Return	Return	Return
GLD	Output 2	Output 1	Output 1	Common	Common	N/A
GLT	Output 2	Output 1	Output 1	Common	Common	Output 3

Dimensions for 40 Watt, GL Series

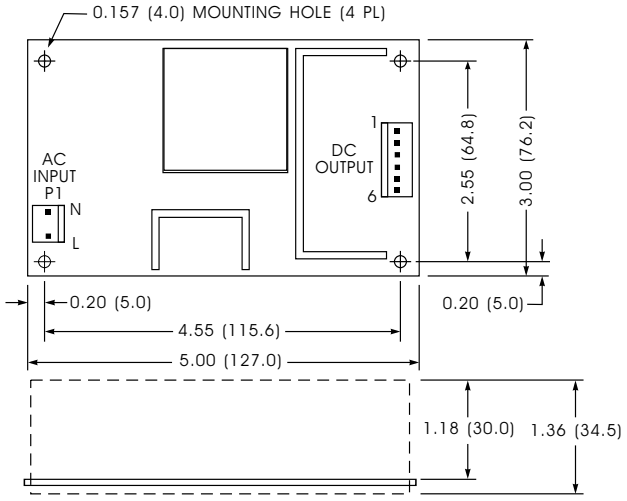

Notes:

1. Tolerance 0.02/0.5 maximum.
2. Input connector Molex # 09-50-3031 and Molex series 2578 #08-50-0105 crimp terminal using Molex # 63811-2200 hand applicator.
3. Output connector Molex# 09-50-3061 and Molex series 2578 #08-50-0105 crimp terminal using Molex # 63811-2200 hand applicator.
4. Weight: 10.6 oz. (300 grams) approx.
5. Input/Output Mating Connector kit available. Catalog number GL40-KIT.
6. All dimensions in inches (mm).

Selection Table for 65 Watt, GL Series

Catalog Number	Output 1	Output 2	Output 3	Output 4	Maximum Output
GLS–01–065	5 V, 10 A	-	-	-	50 W
GLS–02–065	12 V, 5.5 A	-	-	-	65 W
GLS–03–065	15 V, 4.5 A	-	-	-	65 W
GLS–04–065	24 V, 3 A	-	-	-	65 W
GLD–01–065	5 V, 6 A	12 V, 3 A	-	-	65 W
GLD–02–065	5 V, 6 A	15 V, 3 A	-	-	65 W
GLD–03–065	5 V, 6 A	24 V, 2 A	-	-	65 W
GLT–01–065	5 V, 6 A	12 V, 3 A	-5 V, 0.3 A	-	65 W
GLT–02–065	5 V, 6 A	12 V, 3 A	-12 V, 0.5 A	-	65 W
GLT–03–065	5 V, 6 A	15 V, 3 A	-15 V, 0.5 A	-	65 W
GLT–04–065	5 V, 6 A	15 V, 3 A	-12 V, 0.5 A	-	65 W
GLT–05–065	5 V, 6 A	24 V, 2 A	-12 V, 0.5 A	-	65 W
GLQ–01–065	5 V, 6 A	12 V, 3 A	-12 V, 0.5 A	-5 V, 0.5 A	65 W

Output Connector

Model	Pin 1	Pint 2	Pin 3	Pin 4	Pin 5	Pin 6	Pin 7	Pin 8
GLS	Output 1	Output 1	Output 1	Output 1	Return	Return	Return	Return
GLD	Output 1	Output 1	Common	Common	Output 2	Output 2	N/A	N/A
GLT	Output 1	Output 1	Common	Common	Output 2	Output 2	Output 3	N/A
GLQ	Output 1	Output 1	Common	Common	Output 2	Output 2	Output 3	Output 4

Dimensions for 65 Watt, GL Series

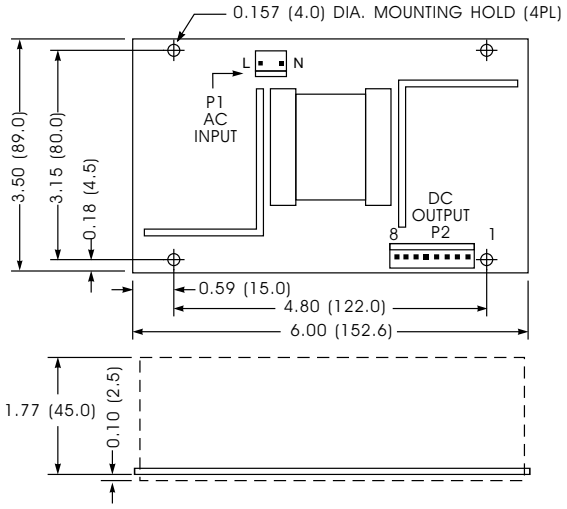

Notes:

1. Tolerance 0.02/0.5 maximum.
2. Input connector Molex # 09-50-3031 and Molex series 2578 #08-50-0105 crimp terminal using Molex # 63811-2200 hand applicator.
3. Output connector Molex # 09-50-3081 and Molex series 2578 #08-50-0105 crimp terminal using Molex # 63811-2200 hand applicator.
4. Weight: 13.4 oz. (380 grams) approx.
5. Input/Output Mating Connector kit available. Catalog number GL65-KIT.
6. All dimensions in inches (mm).